PoWer MIG Series

GeKaMac®

POWER MIG 3500
Users Manual

Please Read and Understand This Manual
Before Operating The Welding Machine

www.gedikwelding.com

This machine is for internal use only.

It complies with the WEEE Directive.

This machine has been designed in accordance with the EN 60974-1 and EN 60974-10 standards.

The machine is safe when installation, operation, and maintenance are performed in accordance with the user manual and regulations. The operator and machine owner are responsible for adhering to safety rules.

Gedik Kaynak San. Ve Tic. A.Ş. assumes no responsibility for safety or CE compliance if any modifications are made to the machine or if safety rules are not followed.

This Class A equipment is not suitable for use in homes and similar residential areas where the power supply is provided by the low-voltage public electricity network.

This machine is not household waste and cannot be disposed of in the trash.

When the machine reaches the end of its service life or becomes obsolete, it must be disposed of in accordance with regulations.

COMPLIES WITH THE WEEE DIRECTIVE.

Eco Design Statement

This machine has been designed and manufactured in accordance with the requirements of the 2009/125/EC Eco Design Directive concerning the environmentally friendly design of energy-related products.

Accordingly, machines with an idle mode are as follows.

	Idle Mode
MMA	**X**
MIG	√
TIG	√
Plazma	√
SAW	**Out of Scope**

Efficiency measurements should be conducted only on the power unit. The water cooling system should be disabled. For more information on measurements and machine settings, Gedik Kaynak Sanayi ve Ticaret A.Ş. should be consulted.

AT UYGUNLUK BEYANI

EU DECLARATION OF CONFORMITY

Bu uygunluk beyanı yalnızca imalatçının sorumluluğu altında düzenlenir.

This declaration of conformity is issued under the sole responsibility of the manufacturer.

İstanbul, Turkey, 08.03.2024

İmalatçı / Manufacturer

GEDİK KAYNAK SANAYİ ve TİCARET A.Ş.

Ankara Cad. No.306 Seyhli Pendik ISTANBUL TURKIYE

Ürün / Product	ARC WELDING MACHINE
Marka-Model / Brand- Model	POWER MIG 3500

Yukarıda tanımlanan beyanın nesnesi ilgili uyumlaştırılmış AB mevzuatı ile uyumludur.

The object of the declaration described above, is in conformity with the relevant union harmonisation legislation.

Direktifler / Directives 2014/30/EU & 2014/35/EU & 2009/125/EC

Uyumlaştırılmış standartlar ve uygunluğun deklare edilmesiyle ilişkili diğer referanslar.

References to the relevant harmonised standarts used and references to the other technical specifications in relation to which conformity is declared.

EN IEC 60974-1:2018-A1:2019
EN IEC 60974-10:2021

Bu ekipman, talimatlara uygun kurulduğunda, bakımı yapıldığında ve kullanıldığında belirtilen standartlara uygundur. Makine üzerinde bir değişiklik yapıldığında veya yanlış kullanımda deklarasyon geçersiz olur.

The equipment is in compliance with pertinent legislation when installed, utilized, and maintained in accordance with the enclosed instructions. This declaration will be invalid under any modification or improper use.

İmalatçı Adına imzalayan / Signed for and on behalf of:

Hatice Özel, Equipment Business Unit Director

Dear Customer

This instruction manual will help you get to know your new machine. Read the manual carefully and you will soon be familiar with all the many great features of your new product. Meanwhile, please remember well safety rules and operate as instruction.

If you treat your product carefully, this definitely helps to prolong its enduring quality and reliability–things which are both essential prerequisites for getting outstanding results.

Production specification may change without advance notice.

The model you purchase is for:

- ☐ POWER MIG 3500/5000

Please find corresponding models from the "Contents".

Important:

Please take special note of safety rules and operate as instruction in case of damage and serious injury.

Safety Rules

"Danger" indicates an imminently hazardous situation which, if not avoided, will result in death or serious injury.

"Warning!" indicates a possible hazardous situation which, if not avoided, could result in death or serious injury. The possible hazards are explained in the text.

"Caution" indicates a possible hazardous situation which, if not avoided, may result in slight or moderate injury.

"Note!" indicates a situation which implies a risk of impaired welding result and damage to the equipment.

"Important!" indicates practical tips and other useful special-message. It is no signal word for a harmful or dangerous situation.

Utilization for intended purpose only

- The machine may only be used for jobs as defined by the "Intended purpose".
- Utilization for any other purpose, or in any other manner, shall be deemed to be "not in accordance with the intended purpose". The manufacturer shall not be liable for any damage resulting from such improper use.

Safety signs

- All the safety instructions and danger warnings on the machine must be kept in legible condition, not removed, not be covered, pasted or painted cover.

Safety inspection

- The owner/operator is obliged to perform safety inspection at regular intervals.
- The manufacturer also recommends every 3-6 months for regular maintenance of power sources.

Electric shock can kill

- Touching live electrical parts can cause fatal shocks or severe burns. The electrode and work circuit is electrically live whenever the output is on. The input power circuit and machine internal circuits are also live when power is on. In MIG/MAG welding, the wire, drive rollers, wire feed housing and all metal parts touching the welding wire are electrically live. Incorrectly installed or improperly grounded equipment is a hazard.
- Do not touch live electrical parts of the welding circuit, electrodes and wires with your bare skin or wet clothing.
- The operator must wear dry hole-free insulating welding gloves and body protection while performs the welding.
- Insulate yourself from work and ground using dry insulating protection which is large enough to prevent you full area of physical contact with the work or ground.
- Connect the primary input cable according to rules. Disconnect input power or stop machine before installing or maintenance.
- If welding must be performed under electrically hazardous conditions as follow: in damp locations or wearing wet clothing; on metal structures such as floors, gratings, or scaffolds; when in cramped positions such as sitting, kneeling, or lying; or in occasion when there is a high risk of unavoidable or accidental contact with the work piece or ground. Must use additional safety precautions: semiautomatic DC constant voltage (wire) welder, DC manual (Stick) welder and AC welder with reduced open-load voltage.
- Maintain the electrode holder, ground clamp, welding cable and welding machine in good, safe operating condition. Replace damaged part immediately.

Electric and magnetic fields (EMF) may be dangerous

- If electromagnetic interference is found to be occurring, the operator is obliged to examine any possible electromagnetic problems that may occur on equipment as follow:

- minas, signal and data-transmission leads
- IT and telecoms equipment
- measurement and calibration devices
- Wearers of pacemakers

- Measures for minimizing or preventing EMC problems:

– Mains supply

If electromagnetic interference still occurs, despite the fact that the mains connection in accordance with the regulations, take additional measures

– Welding cables

Keep these as short as possible

Connect the work cable to the work piece as close as possible to the area being welded.
Lay tem well away from other cables.
Do not place your body between your electrode and work cables.

- Equipotential bonding
- Workpiece grounding (earthing)
- Shielding

Shield the entire welding equipment and other equipment nearby.

ARC rays can burn

- Visible and invisible rays can burn eyes and skin.
- Wear an approved welding helmet or suitable clothing made from durable flame-resistant material (leather, heavy cotton, or wool) to protect your eyes and skin from arc rays and sparks when welding or watching.
- Use protective screens or barriers to protect other nearby personnel with suitable, non-flammable screening and/or warn them not to watch the arc nor expose themselves to the arc rays or to hot spatter or material.

Fumes and gases can be dangerous

- Welding may produce fumes and gases, breathing these fumes and gases can be hazardous to your health.
- When welding, keep your head out of the fume. If inside, ventilate the area at the arc to keep fumes and gases away from the breathing zone. If ventilation is not good, wear an approved air-supplied respirator.
- Work in a confined space only if it is well ventilated, or while wearing an air-supplied respirator.
- Welding fumes and gases can displace air and lower the oxygen level causing injury or death. Always use enough ventilation, especially in confined areas, to insure breathing air is safe.

Welding and cutting sparks can cause fire or explosion

- When not welding, make sure the electrode circuit is not touching the work or ground. Accidental contact can cause sparks, explosion, overheating, or fire. Make sure the area is safe before doing any welding.
- Welding and cutting on closed containers, such as tanks, drums, or containers, can cause them to blow up. Make sure proper steps have been taken.
- When pressure gas is used at the work site, special precautions are required to prevent hazardous situations.
- Connect work cable to the work as close to the welding zone as practical to prevent welding current from passing too long and creating fire hazards or overheat.
- Wear oil-free protective garments such as leather gloves, heavy shirt, cuffless trousers, high shoes, and a cap. Wear ear plugs when welding out of position or in confined places. Always wear safety glasses with side shields when in a welding area.
- Be attention that welding sparks and hot materials from welding can easily go through small cracks and openings to adjacent areas and start a fire. Remove fire hazardous from the welding area, if not possible, cover them thoroughly. Do not weld where flying sparks can strike flammable material and where the atmosphere may contain flammable dust, gas, or liquid vapors (such as gasoline).
- Protect yourself and others from flying sparks and hot metal. Remove any combustibles from operator before perform any welding.
- Keep a fire extinguisher readily available.
- Empty containers, tanks, drums, or pipes which have combustibles before perform welding.
- Remove stick electrode from electrode holder or cut off welding wire at contact tip when not in use.
- Apply correct fuses or circuit breakers. Do not oversize or bypass them.

Cylinder can explode if damaged

- Pressure gas cylinders contain gas under high pressure. If damaged, a cylinder can explode. Since gas cylinders are normally part of the welding process, be sure to treat them carefully.
- Cylinders should be located away from areas where they may be struck or subjected to physical damage. Use proper equipment, procedures, and sufficient number of persons to lift and move cylinders.
- Always install cylinders in an upright position by securing to a stationary support or cylinder rack to prevent falling over or tipping.
- Keep a safe distance from arc welding or cutting operations and any other source of heat, sparks, or flame.
- No touching cylinder by welding electrode, electrode holder or any other electrically “hot” parts. Do not drape welding cables or welding torches over a gas cylinder.
- Use only correct compressed gas cylinders, regulators, hoses, and fittings designed for the process used; maintain them and associated parts in good condition.
- Use only compressed gas cylinders containing the correct shielding gas for the and properly operating regulators designed for the gas and pressure used. All hoses, fittings, etc. should be suitable for the application and maintained in good condition.
- Open the cylinder valve slowly and keep your head and face away from the cylinder valve outlet.
- Valve protection caps should be kept in place over valve expect when the cylinder is in use or connected for use.

Hot parts can burn

- Do not touch hot parts with bare hand or skin.
- Ensure equipment is cooled down before perform any work.
- If touching hot parts is needed, use proper tools and/or wear heavy, insulated welding gloves and clothing to prevent burns.

Flying metal or dirt can injure eyes

- When welding, chipping, wire brushing, and grinding can cause sparks and flying metal. It can hurt your eyes.
- Remember wear appropriate safety glasses with side shields when in welding zone, even under your welding helmet.

Noise can damage hearing

- Noise from some processes or equipment can damage hearing.
- Remember wear approved ear protection to protect ears if noise level is high.

Moving parts can injure

- Stay away from moving parts such as fans.
- Stay away from pinch points such as drive rolls.
- Keep all doors, panels, covers, and guards closed and securely in place.
- Have only qualified persons remove doors, panels, covers, or guards for servicing and maintenance.
- Reinstall doors, panels, covers, or guards when servicing and maintenance is finished and before reconnecting input power.

Overuse can cause overheating

- Use machine follow duty cycle. Reduce current or reduce duty cycle before starting to weld again.
- Allow cooling period.
- Do not block or filter airflow to unit.

Static can damage PCB

- Always wear wrist straps before touching PCB or parts.
- Use proper static-proof bags and package to store or move PCB.

Safety markings

- Equipment with CE-markings fulfils the basic requirements of the Low-Voltage and Electromagnetic Compatibility Guideline (e.g. relevant product standards according to EN 60 974).

Safety markings

- The equipment with the CCC mark meets the basic requirements stipulated in the Chinese standards GB / T15579.1-2013 and GB / T8118.

Safety markings

- This marking means that the product is certified for both the U.S. and Canadian markets, to the applicable U.S. and Canadian standards. The preferred location of the indicators is as shown.

Contents

1- GENERAL REMARKS....6
1-1 Power source features....6
1-2 Functional principle....6
1-3 Output characteristics....6
1-4 Duty cycle....7
1-5 Applications....7
1-6 Warning label....7
2-VERSIONS BRIEFS....8
3-BEFORE COMMISSIONING....8
3-1 Utilization for intended purpose only....8
3-2 Machine installation rules....8
3-3 Power source connection....8
3-4 Welding cables instruction....9
4- POWER MIG 3500/5000....10
4-1 System components....10
4-2 Basic equipments for welding....10
4-3 Control panel....11
4-4 Interface....13
4-5 Installation....14
4-6 welding process installation....17
4-7 Technical data....18
4-8 Dimension....18
4-9 Disassembly and reassembly....19
5-TROUBLE SHOOTING....22
6 –CARE AND MAINTENANCE....23

1- GENERAL REMARKS

This series of power sources apply IGBT soft switch inverter technology. Its internal control system applies digital signal processor which ensures quick response to any change during the welding process so as to achieve precise control of welding process and ensure optimal welding results.

1-1 Power source features

Highlights as follows:

- Enjoy reasonable static characteristic and sound dynamic characteristic
- Less spatter due to the advanced waveform control technology
- Continuous adjustment of welding current and voltage with wide range
- 2 step / 4 step
- Perfect functions of starting arc and reducing melting ball while stopping arc
- Multiple security functions
- Stable wire feeding due to the highly stable power supply from wire feeding circuit
- Light weight, small size, ideal for portable applications
- Capable of operation with extended 50 meters long welding cable

1-2 Functional principle

This series of power sources adopt IGBT soft switch inverter technology to improve the dynamic response rate and make the machines with small size and light weight. The control circuit's closed-loop control makes the power source enjoy strong ability against power grid fluctuation and perfect welding performance.

Fig.1-2-1: Schematic diagram

1-3 Output characteristics

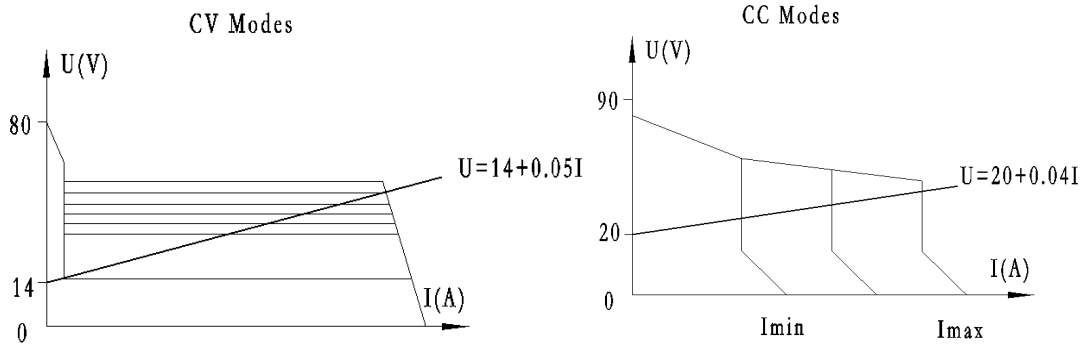

Fig.1-3-1: Output characteristics

1-4 Duty cycle

Duty cycle is percentage of 10 minutes that a machine can weld at rated load without overheating. If overheats, thermostat(s) will open, output stops. Wait for fifteen minutes for the machine to cool down. Reduce amperage or duty cycle before welding.

Note! Exceeding duty cycle can damage the machine and greatly reduce its lifespan.

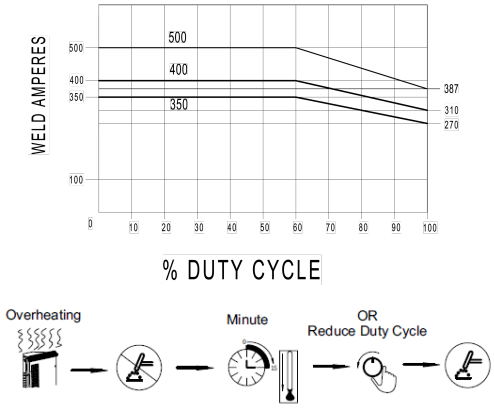

Fig.1-4-1: Duty cycle

1-5 Applications

The MIG-M power source can be used with solid and flux-cored welding wire for welding carbon steel, alloy steel etc. The power source is designed for the following recommend areas:

- Automobile and car manufacture industry
- Chemical structure and engineering
- Boiler pressure vessel manufacture
- Shipbuilding and offshore engineering
- Vehicle manufacturing
- Mechanical industry
- Other industries

1-6 Warning label

The warning label is affixed on the top of machine.

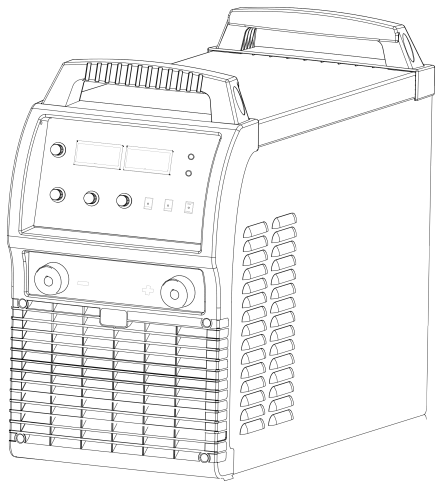

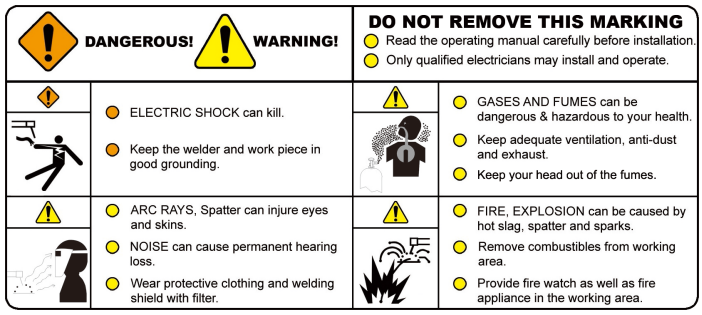

Fig. 1-6-1: Warning label

2-VERSIONS BRIEFS

Professional welding of special materials requires special welding parameters. Different models of the power sources are matched to different welding.

- **POWER MIG 3500/5000**
  MIG-M series is designed in accordance with the industrial standard. It has constant voltage (CV) and constant current (CC) characteristics, and has five different welding process: CO2/MAG, STICK, TIG, GOUGING, FCAW. The rated welding current degree is 350A, 400A, 500A

3-BEFORE COMMISSIONING

Warning! Operating the equipment incorrectly can cause serious injury and damage. Do not use the functions described here until you have read and completely understood “safety rules”.

3-1 Utilization for intended purpose only

The power source may only be used for CO2/MAG, STICK, TIG, GOUGING, FCAW . Utilization for other purposes, or in any other manner, shall be deemed to be "not in accordance with the intended purpose". The manufacturer shall not be liable for any damage resulting from such improper use. Operate, inspect and maintain should follow all the instructions given in this manual.

3-2 Machine installation rules

According to test, protection degree of this power source is IP21S (optional IP23S). However, the internal key components must be protected from direct soaking.

Warning! A machine that topples over or falls from its stand can cause injury. Place equipment on an even, firm floor in such a way that it stands firmly.

The venting duct is very important for safety protections. When choosing the machine location, make sure it is possible for the cooling air to freely enter and exit through the louvers on the front and back of machine. Any electro conductive metallic dust like drillings must not be allowed to get sucked into the machine.

3-3 Power source connection

- The power source is designed to run on the voltage given on the nameplate.
- The mains cables and plugs must be mounted in accordance with the relevant technical standards.
- The power supply sockets that come with power source are designed to use strictly according to the marked voltages.

Note! Inadequately dimensioned electrical installations can lead to serious damage. The mains lead, and its fuse protection, must be dimensioned in accordance with the local power supply. The technical data shown on the nameplate shall apply.

3-4 Welding cables instruction

When welding, please pay attention to the followings:

a. The welding cables should be kept as short as possible;

b. If extended cable is used, please do as shown in Fig. 3-4-1.

Wrong Coil the excess ground cable and welding cable in same direction respectively.	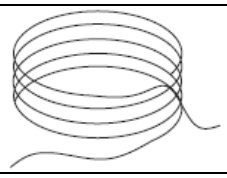
Correct Straighten the ground cable and welding cable and make them close to each other. Bundle the ground cable and welding cable together, running the wires close to the ground.	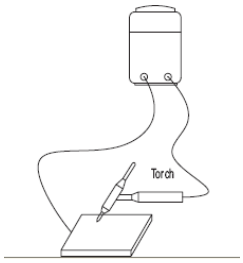
Correct When the excess cables are only be used by rolling up, coil the cables to two windings in reverse direction and overlap them. The number of turns for A is same as the number for B. Handle the welding cable and ground cable according to above-mentioned method.	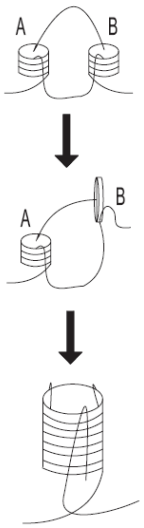

Fig. 3-4-1: Welding cables instruction

4-POWER MIG 3500/5000

4-1 System components

POWER MIG 3500/5000 can be equipped with many different accessories and can be used in different special sites with different configurations.

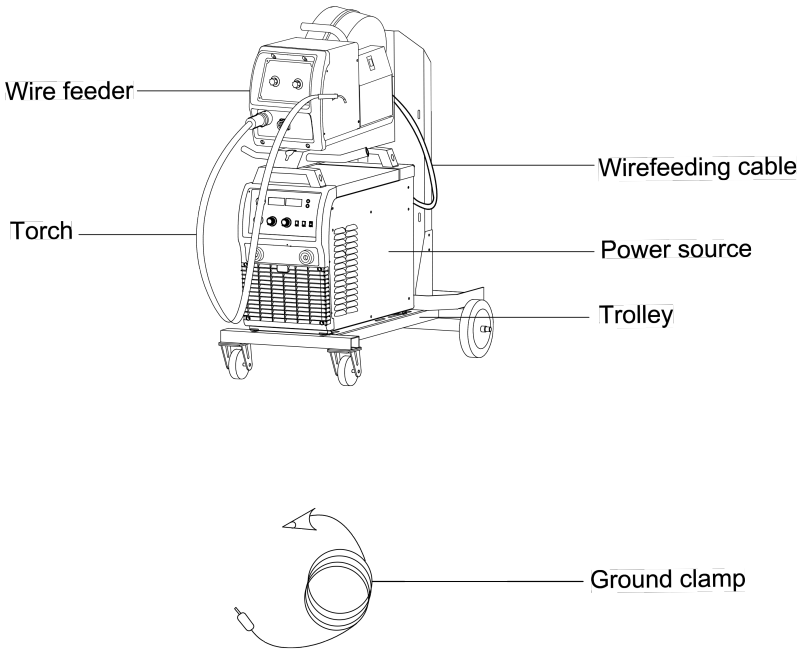

Fig. 4-1-1: System components

4-2 Basic equipments for welding

Only be equipped with the necessary accessories, can the power source MIG-M operate well. The following is the needed accessories list.

CO2/MAG welding

- Power source
- Ground cable
- Welding torch
- gas regulator, gas hose, gas cylinder (to supply the machine with shielding gas)
- Wire feeder
- Welding wire

TIG welding

- Power source
- Ground cable
- TIG welding torch with air valve switch
- Gas regulator, gas hose, gas cylinder (to supply the machine with shielding gas)
- Welding wire

STICK welding

- Power source
- Ground cable
- Electrode holder
- Electrode

4-3 Control panel

The functions on the control panels are all arranged in a very logical way. The various modes and parameters needed for welding are easy to select by pressing the appropriate button; parameters are easy to be adjusted by rotating encoder. Synergic adjustment makes the complicated operation much easier.

Note! Some described parameters in this manual may be slightly different from the power source, some identification may be slightly different from power source identification, but the manner of working is the same.

Warning! Operating the equipment incorrectly can cause serious injury and damage. Do not use the functions described here until you have read and completely understood all content of this manual.

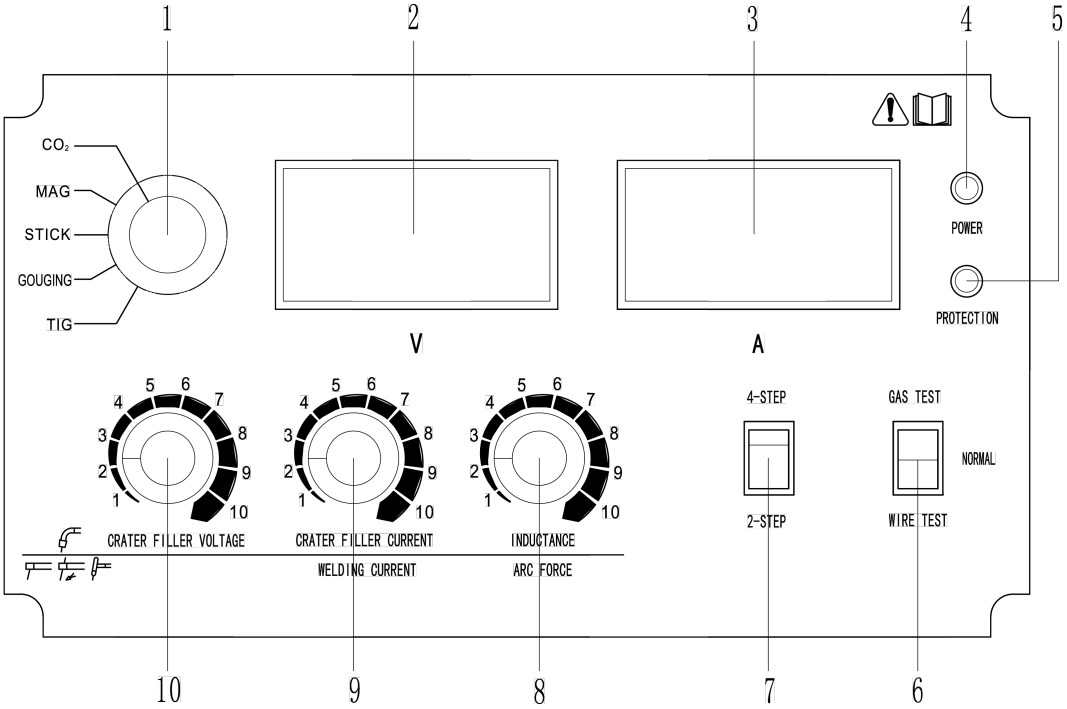

Fig. 4-3-1: Control panel

1.Welding processes selection switch

Below are the selectable welding processes:

- CO2
- MAG
- STICK (MMA)
- TIG
- GOUGING

2.Voltage displayer

- CO2/MAG:

When in standby, display the preset voltage value;

During welding, display the actual welding voltage value.

- Stick, TIG, Gouging:

Display the actual welding voltage both in open load and during welding;

3.Welding current displayer

- CO2/MAG:

When in standby, the wire feeding speed relative value (3~100) is displayed;

During welding, display the actual welding current value.

- Stick, TIG, Gouging:

When open load, display the preset current value;

During welding, display the actual welding current value.

4.Power indicator

Show whether the welding machine is power on or not.

5.Overheat protection indicator

During normal welding, this indicator is off;

Lights up when the power source overheats and machine will automatically stop welding. Once the power source cools down，this light will go OFF and everything will be back to normal.

6.Status selection switch

Gas test: when in “GAS TEST” status, the solenoid valve will on, and you can regulate CO2 gas flow rate at the pressure regulator.

Wire test: when in “WIRE TEST” status, you can check whether the wire feeding is ok or not;

Normal: can start normal welding.

7.Torch control switch (2T/4T)

Important! The 2T/4T is valid in MIG/MAG and FCAW only.

Operating mode of torch

Graphic symbol

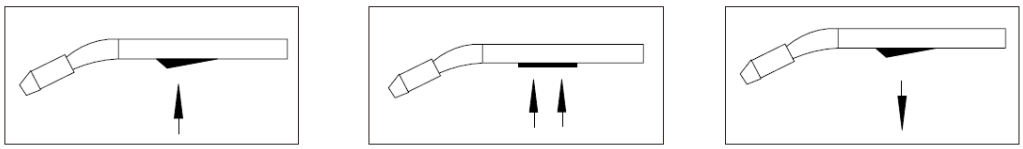

Fig. 4-3-2 Press torch trigger Fig. 4-3-3 Hold torch trigger Fig. 4-3-4 Release torch trigger

P03……Pre-gas time

I……..Welding current: Uniform thermal input for the preheated base metals.

P06……Crater-filler parameter: Prevent burn-through caused by too much heat at the welding ends.

P04……Post-gas time

P01……Burn back time

- 2-step mode

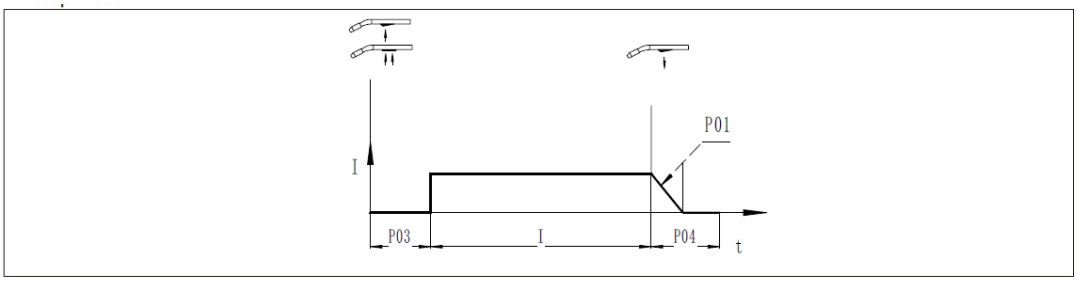

Fig. 4-3-5: 2-step mode

- 4-step mode

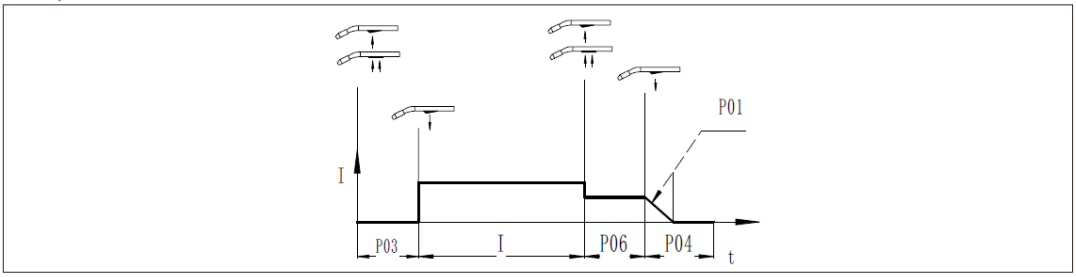

Fig. 4-3-6: 4-step mode

8.Inductance /arc force adjustment knob

- CO2/MAG: it is used to change the welding stability, penetration and spatter.

When decrease inductance, there will be stiff, stable arc, smaller penetration and more spatter;

When increase inductance, there will be soft arc, bigger penetration, less spatter.

- Stick: to adjust the arc force current value;
- TIG/Gouging: inactive.

9.Crater filler current/welding current control knob

- In 4-step mode under CO2/MAG, it is used to adjust the preset crater filler current.

Important! The digital meter does not display the preset crater filler current value when presetting. When comes into the actual crater filler status, it will display the actual crater filler current value.

- In STICK, TIG, GOUGING, it is used to adjust the preset welding current, and the value will display on digital meter.

10.Crater filler voltage adjustment knob

- Only valid in 4 step mode under CO2/MAG to adjust the crater filler voltage.

Important! The digital meter does not display the preset crater filler voltage value when presetting. When comes into the actual crater filler status, it will display the actual crater filler voltage value.

4-4 Interface

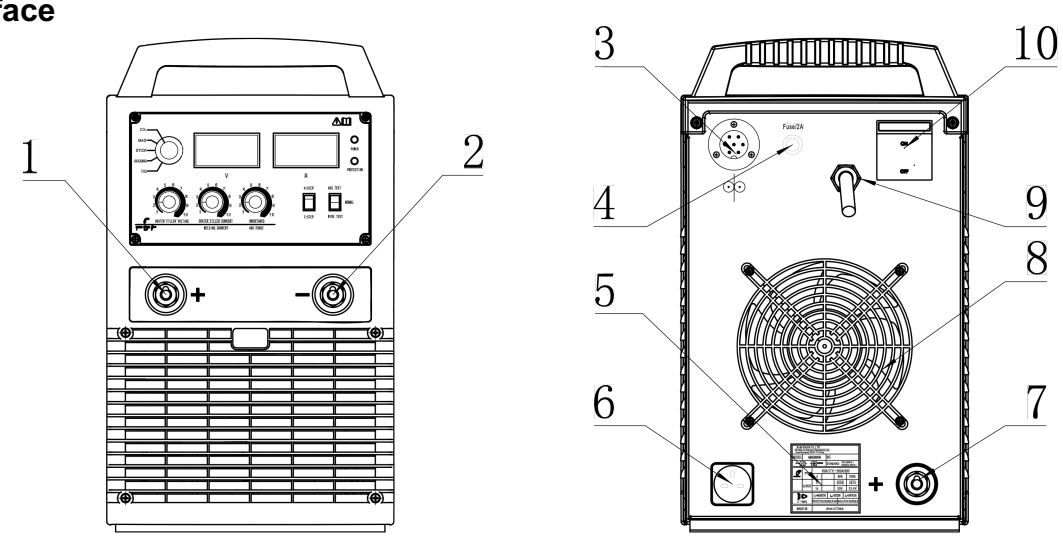

Fig. 4-4-1: interface

1.Positive welding terminal (+)

- TIG: connect to the ground cable;
- Stick: connect to electrode holder ;
- Gouging: connect with the gouging torch.

2.Negative welding terminal (-)

- Gouging/STICK /CO2/MAG: connect with the ground cable;
- FCAW/TIG: connect with the welding torch

3.Wire feeder control socket

For connecting with the control cable of wire feeder.

	PIN NO.	Description
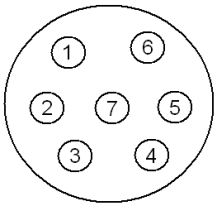	1	Connect with wire feeder motor
	2	+24V connect to solenoid valve
	3	Torch trigger
	4	Current/ Voltage preset signal
	5	Common GND for Torch trigger& Current/ Voltage preset
	6	Common GND for wire feeder motor and solenoid valve
	7	Arc voltage feedback

Table. 4-4-1: Wire feeder control socket

4.Fuse 2A

5.Nameplate

Please refer to the nameplate for the technical parameters of the welding machine.
6.Power supply socket for gas heater (AV36V)
It is used to connect the heater coil of the gas regulator.
7.Quick socket (+)
In CO2/MAG solid wire: it is used to connect with welding cable of wire feeding cable.
In CO2/MAG Flux core wire: it is used to connect with welding cable of wire feeding cable.
8.Fan
9.Power cord
Three-phase four-wire system, yellow-green wire connection ground(PE wire).
10.Circuit breaker
The function of circuit breaker is to protect welding machine and operator by automatic trip to turn-off power supply when overload or short circuit happens to the power source. Normally, the switch flipped to upward means power-on. To start or stop the welding machine is done by the mains switch in the distribution box. Please do not take this circuit breaker as the power switch.

4-5 Installation

Warning! An electric shock can be fatal. If the machine is plugged into the mains electricity supply during installation, there is high risk of very serious injury and damage. Do not use the functions described here until you have read and completely understood “safety rules” in the beginning. Only carry out work on the machine when

- the mains switch is on turn-off position,
- the machine is unplugged from the mains.

● **Installation of the system components**

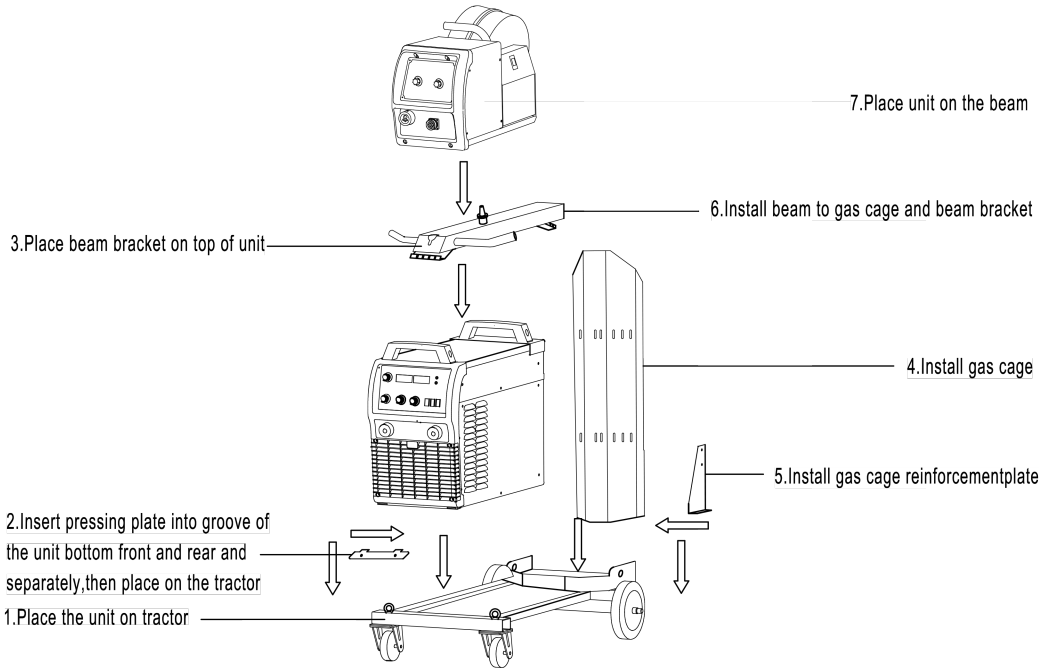

Fig. 4-5-1: Installation of the system components

● **Welding cable components assembly**

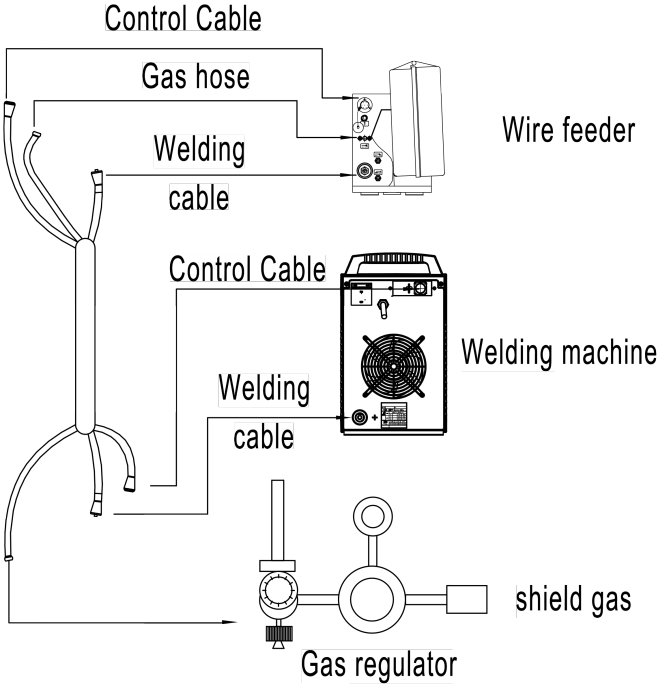

Fig. 4-5-2: Welding cable components assembly

●**Gas cylinder installation**

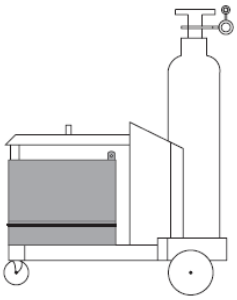

1. Stand the gas cylinder on the trolley and secure it by fixing the cylinder strap around a point in the top third of the cylinder-but never around the neck of the cylinder.
2. Take the protective cap off the gas cylinder.
3. Gently turn the gas-cylinder value anticlockwise, and blow off any dust and dirt.
4. Screw the pressure regulator onto the gas cylinder and tighten it.
5. Connect the shielding-gas connector to the pressure regulator.

Fig. 4-5-3: Gas cylinder installation

● **Mounting the torch**

To ensure normal welding, please make sure that the wire diameter, contact tip, welding torch, welding wire tube are matched to each other.. Choose wire feeding tubes according to wires of different diameters and materials.

- Steel wire hose is suitable for hard wire, such as carbon steel wire, stainless steel wire.

For installation of steel wire feed hose

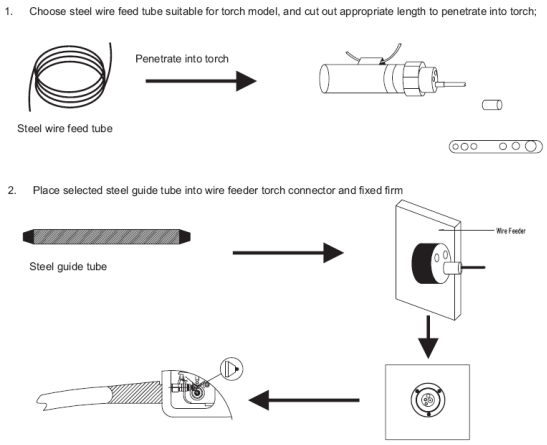

Fig. 4-5-4: Installation for steel wire feed tube

Note! If the wire hose is too tight or too loose, it will increase resistance for wire feeding and cause wire feeding instable.

● **Installation environment requirements**

1. It should be placed indoors without direct sunlight, rainproof, low humidity and less dust. The ambient air temperature range is -10℃~+40℃.
2. The inclination to the ground should not exceed 10°.
3. There should be no wind in the welding station, if any, it should be covered.
4. The welding machine is more than 20cm away from the wall, and the distance between the welding machine is more than 10cm.
5. When using water-cooled welding torch, pay attention to anti-freezing.

● **Power supply and cable requirement**

Please note the size of fuse and circuit breaker in the table below are for reference only.

Model		Power MIG 3500	Power MIG 5000
Power supply			
Electricity grid min. power (KVA)	Power grid	17	31
	Generator	26	48
Input protection(A)	Fuse	30	50
	Circuit breaker	32	63
Cable size (mm²)	Power cord	≥12AWG	≥10AWG
	Output cable	≥35(2AWG)	≥70(2/0AWG)
	Protective GND wire	≥2.512AWG	≥10AWG

Table4-5-1: Power supply and cable requirement

Note! Welding machine must be taken special design if it is powered by generator, please contact with manufacturer if you have such needs.

● **connections of Power cord and distribution box**

Warning! -Avoid hot-line work
- Operating by professional electrician
- Avoid connecting two power sources to one breaker
- Please refer to Table 4-5-1 to check if standard of input voltage, breaker and input cable is suitable

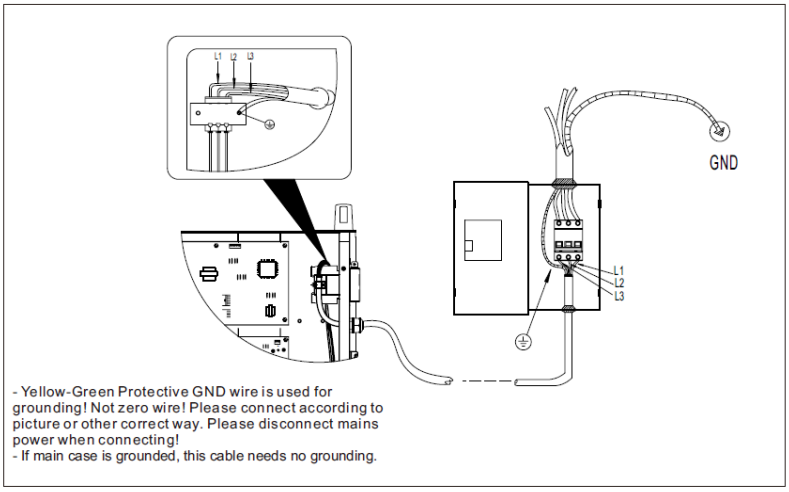

Fig. 4-5-5: Connections of power cord and distribution box

4-6 welding process installation

Warning! Operating the equipment incorrectly can cause serious injury and damage. This part is about operating. Do not use the functions until you have read and completely understood content of this manual.

●MAG/CO2 welding process installation:

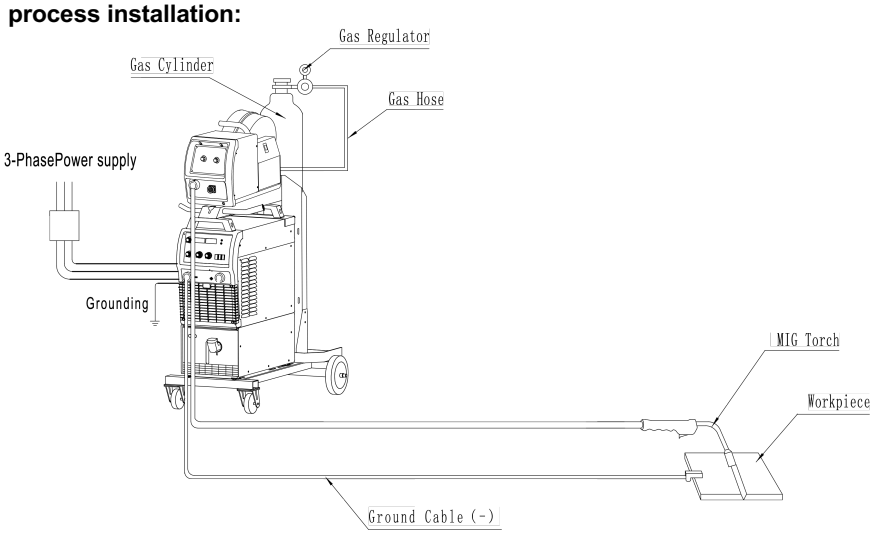

Fig. 4-6-1: Installation for MAG/CO2

● STICK welding process installation:

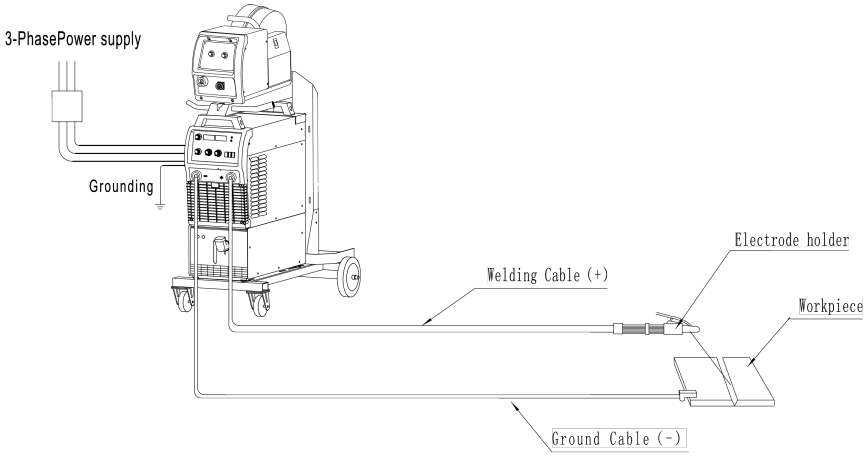

Fig. 4-6-2: Installation for STICK

● TIG welding process installation:

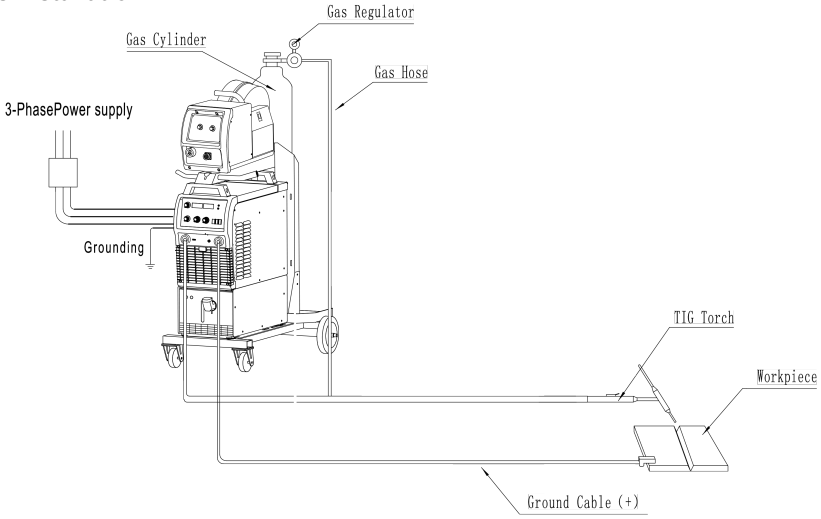

Fig. 4-6-3: Installation for TIG

4-7 Technical data

Model	Power MIG 3500	Power MIG 5000
Voltage Frequency(3~))	AC400V±10％,50Hz	
Rated input capacity (KVA)	14	27
Rated input current (A)	20	35
Range of welding current (A)	60～350	60-500
Range of welding voltage (V)	14～40	14-50
OCV (V)	70	82
Duty cycle (%)	60	
Full-load efficiency (%)	≥87	
Power factor	≥0.95	
Wire diameter (mm)	Φ0.8、Φ1.0、Φ1.2	Φ1.0、Φ1.2、Φ1.6
Gas flow (L/min)	15～25	
Dimension (mm^3)		
Weight (Kg)	45	50
Insulation Class	B	
IP class	IP21S	

Table 4-7-1: technical data

4-8 Dimension

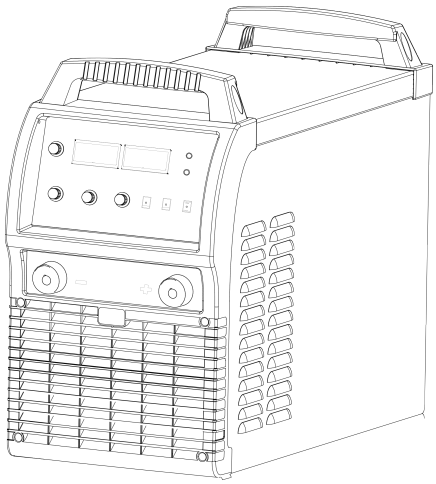

Fig. 4-8-1: Dimension

NO.	Item	Unit(mm)	Unit(inches)
1	length	670	26.4
2	Width	330	13
3	Height	572	22.5

Table. 4-8-1: Dimension

4-9 Disassembly and reassembly

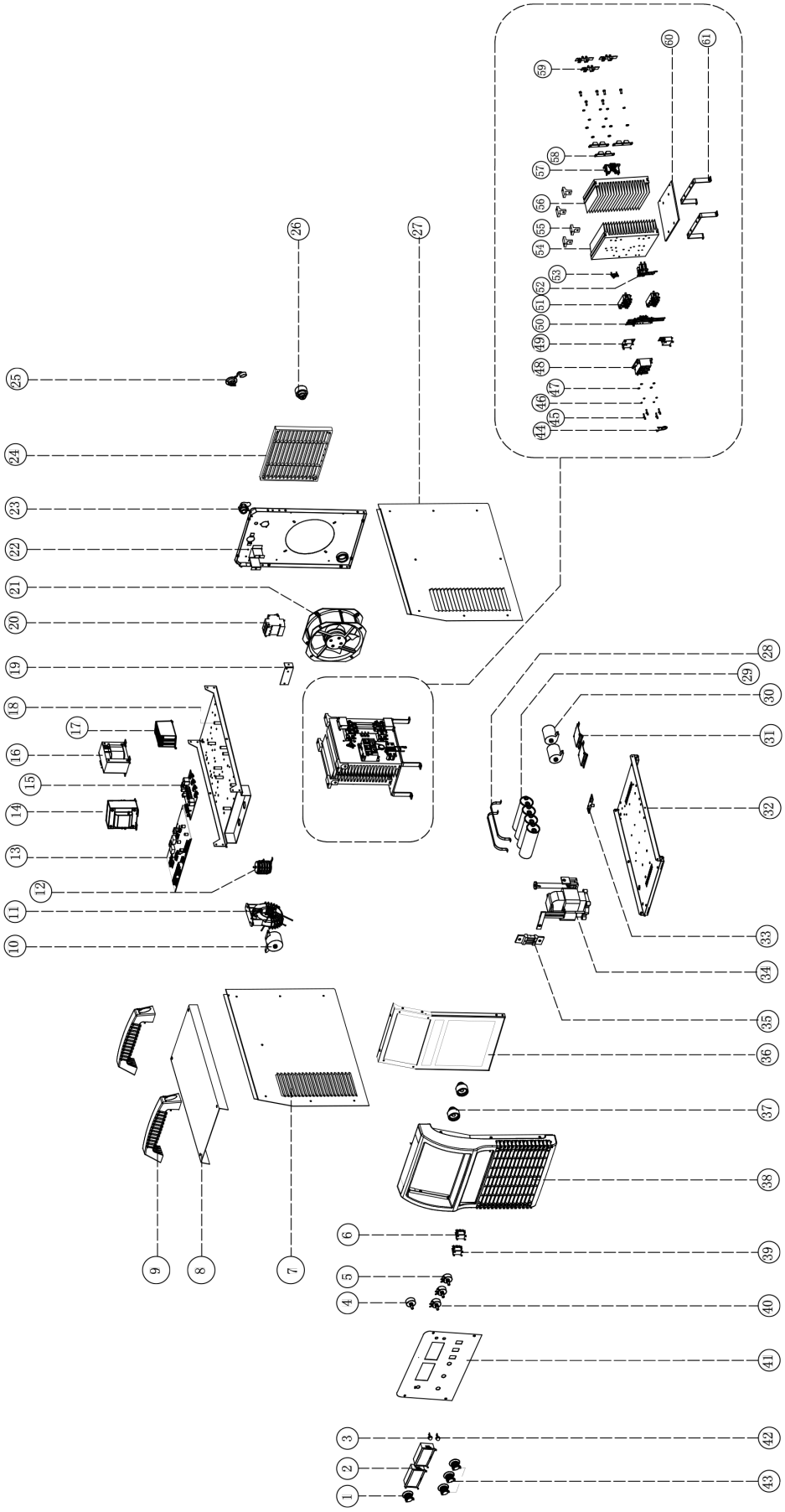

Fig. 4-9-1: Disassemble and reassembly

No	Description	Stock No.	Qty
1	Potentiometer knob	720031-00070	1
2	Digital displayer	755001-00003	2
3	Waterproof indicator	715002-00026	1
4	Band switch	745013-00002	1
5	Potentiometer	720031-00041	1
6	Toggle switch	745002-00003	1
7	Left panel	262017-00632	1
8	Top panel	262029-00477	1
9	Welding machine handle	766003-02388	2
10	Polypropylene	722001-00074	1
11	Main transformer	220629-00015	1
12	Resonant inductor	220521-00004	1
13	Main control board	210580-00078	1
14	Power transformer Ⅰ	220179-00710	1
15	Drive board	210310-00032	1
16	Power transformer Ⅱ	220179-00711	1
17	Filter	752004-00017	1
18	Nylon column	776019-00031	4
19	plate for main circuit breaker	766003-00188	1
20	Circuit breaker	745011-00022	1
21	Fan	746001-00087	1
22	Rear panel	262011-00783	1
23	Cable	773002-00011	1
24	Fan cover	766003-02403	1
25	Control socket	740003-00014	1
26	Quick socket	740002-00026	1
27	Right panel	262023-00617	1
28	Filter capacitor clamp	766003-00248	2
29	Polypropylene	722001-00061	4
30	Polypropylene	722001-00070	2
31	Input capacitor holder	766002-00104	1
32	Bottom panel	263065-00440	1
33	Rack capacitor board	220293-00005	1
34	CD iron core output reactor	763004-00146	1
35	Shunt	720041-00010	1
36	Front panel	262005-01039	1
37	Quick socket	740002-00026	2
38	Plastic front panel	262005-01040	1
39	Toggle switch	745002-00002	1
40	Potentiometer	720031-00042	2
41	Control panel	262035-00316	1
42	Waterproof indicator	715002-00025	1

43	Potentiometer knob	720031-00066	3
44	Varistor	720021-00017	1
45	Screw	779001-00051	10
46	Spring washer	779007-00008	20
47	Flat washer	779007-00019	20
48	Three phase rectifier module	735005-00003	1
49	Polypropylene	722001-00067	2
50	IGBT protection board	220005-00135	1
51	IGBT module	735007-00038	2
52	Input filter inductance	220479-00002	1
53	Temperature relay	745008-00007	1
54	IGBT radiator	264005-00033	1
55	Radiator support	766002-00090	4
56	Output diode radiator	264011-00116	1
57	Current exchange inductor	220281-00008	1
58	Fast recovery diode module	735006-00029	3
59	Diode protection board	220455-00002	3
60	Radiator junction plate	775004-00027	1
61	Radiator support frame	766002-00078	2

Table4-9-1: Main components list

5-TROUBLE SHOOTING

Warning! An electric shock can be fatal. Before doing any work on the machine:

-Switch it off and unplug it from the mains

-Put up a clearly legible and easy-to-understand warning sign to stop anybody inadvertently switching it on again

-Check to make sure the electrically charged components (e.g. capacitors) have been discharged.

-Bolts in machine case also work for ground connection. Never use other bolt that can not work for ground connection.

Note! The flowing troubles and causes are uncertain. However, during the process of MIG Pulse and the normal using conditions, that might happen.

NO.	FAULT	CAUSE	REMEDY
01	Main switch is ON, but indicators are not lit up.	Input is default phase. Circuit breaker is damaged. Fuse (2A) is fusing.	Stop work Replace Replace
02	After power on, the air switch on rear panel automatically tripped	Circuit breaker is damaged. IGBT module is damaged. Three phase rectifier bridge is damaged.	Replace Replace IGBT and drive board Replace or repair
03	During welding, the automatic air switch is tripped.	Overloading, the duty cycle has been exceed. Circuit breaker is damaged	Do not exceed the duty cycle. Replace
04	Can not adjust welding current value	Wire feeder control cable is broken. Check main control board is damaged or not. Main control board is damaged. Power source interconnector is loose or break.	Reconnect Check and replace Fix or replace board Check and reconnect
05	Arc is not stable, spatter is higher	Incorrect welding parameters. Contact tip is worn out.	Check the settings Change the contact tip
06	CO2 gas regulator heater does not work	CO2 gas regulator is damaged. Heater cable is broken or short circuit. Thermistor of heater is damaged.	Replace Replace or reconnect Replace
07	When torch trigger is pressed, wire feeding is ok, while no shielding gas	main control board is damaged. The solenoid valve is damaged.	Fix or replace main control board Change the solenoid valve
08	When torch trigger is pressed, wire feeder does not work, and no open load voltage on displayer.	Torch trigger is damaged. Control cable for wire feeder is broken. Main control board in power source is damaged.	Replace or fix Reconnect Replace or fix
09	Fault indicator is lit up	Temperature relay is damaged. Wires connected to temperature relay maybe broken. Overloading, the duty cycle has been exceeded .	Replace Reconnect Do not exceed the duty cycle. Wait several minutes for cooling down and it will return to normal.

Table5-1: Trouble shooting

6 –CARE AND MAINTENANCE

- **Before open the machine**

Warning! An electric shock can be fatal. Before doing any work on the machine:

-Switch it off and unplug it from the mains

-Put up a clearly legible and easy-to-understand warning sign to stop anybody inadvertently switching it on again

-Check to make sure the electrically charged components (e.g. capacitors) have been discharged.

-Bolts in machine case also work for ground connection. Never use other bolt that cannot work for ground connection.

Maintenance

Please follow the instructions as below to ensure normal lifespan of power source.

-Conduct safety check at regular intervals (see “Safety rules”)

-Dismantle machine side panels and clean machine inside with clean and low-pressure compressed air by professional technician, not less than twice per year. Clean the components at a certain distance only;

-If a lot of dust has accumulated, clean the cooling-air ducts.

- **Daily maintenance**

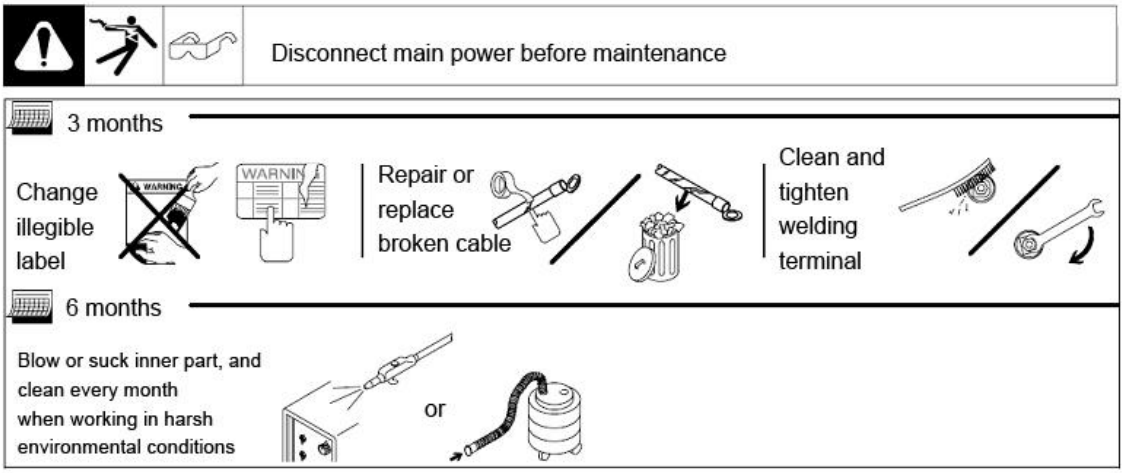

Fig. 6-1: Daily maintenance

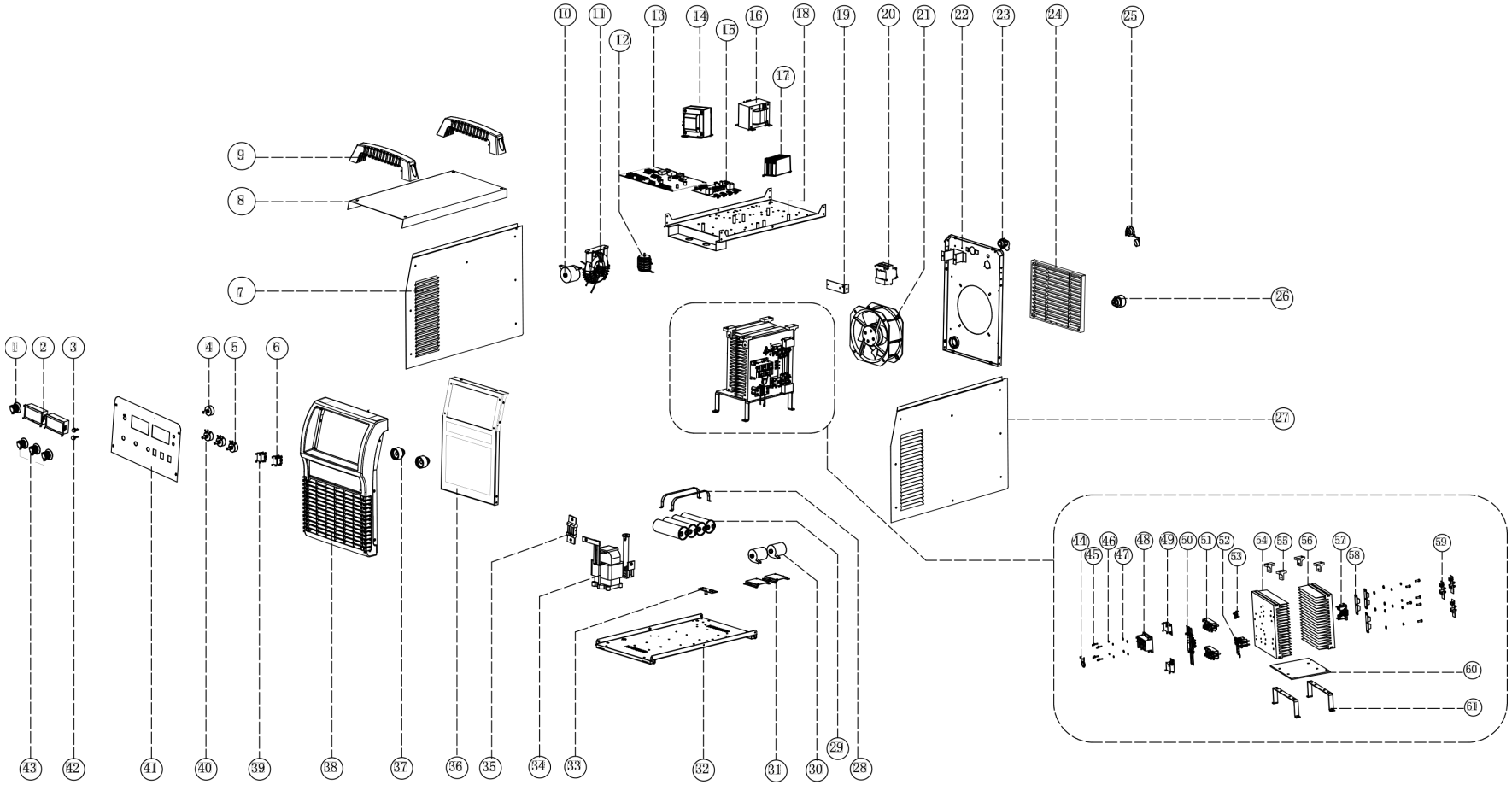
1
2
3
4
5
6
7
8
9
10
11
12
13
14
15
16
17
18
19
20
21
22
23
24
25
26
27
28
29
30
31
32
33
34
35
36
37
38
39
40
41
42
43
44
45
46
47
48
49
50
51
52
53
54
55
56
57
58
59
60
61

No	Description	Stock No.3500	Stock No.5000	SAP KODU Stock No.3500	SAP KODU Stock No.5000
1	Potentiometer knob	720031-00137	720031-00137	6064200442	6064200442
2	Digital displayer	755001-00023	755001-00023	6064000461	6064000461
3	Waterproof indicator	715002-00025	715002-00025	6064200487	6064200487
4	Band switch	745013-00580	745013-00580		
5	Potentiometer	720031-00041	720031-00041		
6	Toggle switch	745002-00003	745002-00003	6064200490	6064200490
7	Left panel	262017-00801	262017-00801	6064200530	6064200530
8	Top panel	262029-00436	262029-00436	6064200531	6064200531
9	Welding machine handle	766003-02388	766003-02388	6064200532	6064200532
10	Polypropylene	722001-00073	722001-00074	6064100180	6064100154
11	Main transformer	220629-00023	220629-00015	6064100254	6064100187
12	Resonant inductor	220521-00007	220521-00004	6064100179	6064100156
13	Main control board	210580-00857	210580-00858		
14	Power transformer Ⅰ	763001-00048	763001-00049	6064100513	6064100514
15	Drive board	210310-00020	210310-00096	6064000204	6064000451
16	Power transformer Ⅱ	763001-00049	763001-00049	6064100514	6064100514
17	Filter	752004-00017	752004-00017	6064000421	6064000421
18	Nylon column	776019-00031	776019-00031		
19	plate for main circuit breaker	766003-00188	766003-00188	6064200130	6064200130
20	Circuit breaker	745011-00021	745011-00022	6064200438	6064200131
21	Fan	746001-00087	746001-00087	6064100525	6064100525
22	Rear panel	262011-00735	262011-00735		
23	Cable	769001-00026	769001-00028	6064200464	
24	Fan cover	766003-02403	766003-02403	6064200462	6064200462
25	Control socket	740001-0051	740001-00051		
26	Quick socket	740002-00026	740002-00026	6064200440	6064200440
27	Right panel	262023-00766	262023-00766	6064200535	6064200535
28	Filter capacitor clamp	766003-00247	766003-00248		6064200142
29	Polypropylene	722001-00061	722001-00061	6064100611	6064100611
30	Polypropylene	722001-00070	722001-00070	6064100163	6064100163
31	Input capacitor holder	766002-00104	766002-00104	6064100192	6064100192
32	Bottom panel	263065-00440	263065-00440		
33	Rack capacitor board	220293-00005	220293-00005	6064000474	6064000474
34	CD iron core output reactor	763004-00158	763004-00146	6064200154	6064100188
35	Shunt	720041-00008	720041-00010		6064200484
36	Front panel	262005-01039	262005-01039	6064200145	6064200145
37	Quick socket	740002-00026	740002-00026	6064200139	6064200139
38	Plastic front panel	262005-01040	262005-01040	6064200448	6064200448
39	Toggle switch	745002-00002	745002-00002	6064200489	6064200489

40	Potentiometer	720031-00042	720031-00042		
41	Control panel	262035-00316	262035-00316		
42	Waterproof indicator	715002-00026	715002-00026	6064200486	6064200486
43	Potentiometer knob	720031-00138	720031-00138	6064200488	6064200488
44	Varistor	720021-00017	720021-00017	6064100167	6064100167
45	Screw	779001-00051	779001-00051	6064200537	6064200537
46	Spring washer	779007-00008	779007-00008	6064200147	6064200147
47	Flat washer	779007-00019	779007-00019	6064200221	6064200221
48	Three phase rectifier module	735005-00002	735005-00003	6064100220	6064100168
49	Polypropylene	722001-00067	722001-00067	6064100169	6064100169
50	IGBT protection board	220005-00164	220005-00135	6064000413	6064100612
51	IGBT module	735007-00048	735007-00038	6064100170	6064100175
52	Input filter inductance	220479-00002	220479-00002	6064100171	6064100171
53	Temperature relay	745008-00042	745008-00045	6064100613	6064100578
54	IGBT radiator	264005-00028	264005-00033		
55	Radiator support	766002-00091	766002-00090		6064200149
56	Output diode radiator	264011-00121	264011-00116		6064200491
57	Current exchange inductor	220281-00008	220281-00008	6064100227	6064100227
58	Fast recovery diode module	735006-00029	735006-00029	6064100173	6064100173
59	Diode protection board	220455-00002	220455-00002	6064000200	6064000200
60	Radiator junction plate	775004-00033	775004-00027		6064200151
61	Radiator support frame	766002-00078	766002-00078	6064200152	6064200152

PoWer MIG Series

GeKaMac®

Gedik Welding Inc.
Ankara Caddesi No: 306 Şeyhli 34906 Pendik - İstanbul / Turkey
P. +90 216 378 50 00 • **F.** +90 216 378 20 44
www.gedikwelding.com